SANY®

QUALITY CHANGES THE WORLD

MATERIAL HANDLING MACHINE

SANY

SANY MARINE

As a key division of SANY International, SANY Marine operates from Zhuhai, Guangdong Province,specializes in MPM (RS, ECH), port crane (RTG, RMG, STS, Jib Crane, MHC and SC), and logistics equipment (material handlers, heavy-duty forklifts, ETT, and TH)

CONTENTS

SANY

- SANY Marine launched its first material handler in 2018, with total sales over 1000 units.
  The product line includes 30 to 200 tons, with both wheeled and crawler chassis options.

SANY

MATERIAL HANDLING MACHINE

Wheel Type

SMHW30

Optional Boom
K12、K14

Overall Weight
33.5-36t

Engine power
180kW/145kW

SMHW40E/SMHW40

Optional Boom
K14、K15、K17

Overall Weight
39.5t

Main pump power
160kW

Swing system power
80kW

Engine power
168kW/175kW

Rail Gantry

SMHW48

Optional Boom
K14、K18、K20

Overall Weight
45t-47t

Engine power
212kW/252kW

SMHW80

Optional Boom
K18、K22、K24

Overall Weight
97t-105t

Engine power
260kW

SMHR200

Optional Boom
K31、K35

Overall Weight
220t-235t

Engine power
2*353kW

Crawler-Type

SMHC35

Optional Boom
K12

Overall Weight
32.5t

Engine power
147kW

SMHC45V

Optional Boom
K11、K14

Overall Weight
42t-44t

Engine power
212kW

SMHC50V-D(Towing Power)

Optional Boom
K11、K14

Overall Weight
43t-44t

Engine power
160kW

SMHC70

Optional Boom
K18、K20、K22

Overall Weight
66t-71t

Engine power
260kW

SMHC100

Optional Boom
K18、K22、K24

Overall Weight
97t-105t

Engine power
260kW

SMHC160

Optional Boom
K22、K26

Overall Weight
170t-175t

Engine power
2*235kW

SANY

Material Handler Overview

- A material handler is a high-efficiency multi-purpose equipment for bulk/general cargo loading, unloading, and stacking. It executes specialized operations including grabbing, clamping, hoisting, and cutting in specific applications.
- It is widely used in scrap metal, mining, timber, waste management, as well as ports, rail terminals, logistics yards, and industrial warehouses. Combining functions of cranes, loaders, and excavators, it can perform partial roles of these machinery.


Port Operations


Scrap Metal Handling


Coal Handling


Bulk Cargo Handling

Diesel vs Electric Comparison

- The boom drive utilizes an independent positive/negative swing angle two-quadrant piston pump system that harnesses potential energy during boom lowering.
- The slewing mechanism employs permanent magnet synchronous motor drive with regenerative braking capability for kinetic energy recovery.
- Delivers industry-leading energy efficiency with an average runtime of up to 8 hours.
- Operating costs are as low as 24% compared to conventional diesel-powered models.

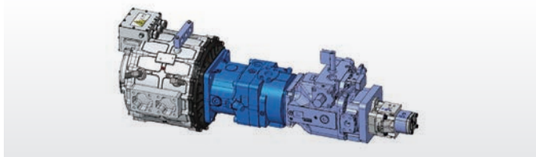
Electro-Hydraulic Maindrive


Slewing drive

CATL Battery Pack

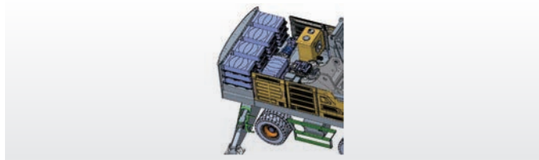
Construction

SMHW30

- Load-sensing hydraulics, 10% lower fuel use
- Optimized engine-pump match
- Auto-idle & multi-speed throttle
- 300ms response, 400t/h efficiency

Product Parameters

Technical Parameter

ITEM			UNIT	SMHW30
Power System	Engine	Model	-	Mitsubishi D06FRC
		Rated Power	kW/rpm	147/2100
		Torque	Nm/rpm	750/1350
		Emission	-	com III
		Oil Tank Capacity	L	465
Chassis	Track Width		mm	2387
	Wheel Base		mm	2800
	Support Width (lengthways)		mm	4750
	Support Width (crosswise)		mm	4140
	Turning Radius		mm	8000
	Max. Travelling Speed		km/h	20
Hydraulic System	Type Of Control		-	Electronically Controlled Positive Flow System
	Main Pump	Rated Flow	L/min	2×260

Configuration Parameter

CONFIGURATION		UNIT	SMHW30	
Hydraulic System	Max. System Pressure	MPa	34.5	
	Hydraulic Oil Tank	L	230	
Slewing Gear	Max. Rotating Speed	rpm	8	
Cabin	Cabin Lift Height	mm	2650	
Basic Parameters	Boom Configuration	m	12	14
		m	Boom 7.3	Boom 8.6
		m	Stick 5.1	Stick 5.6
	Max. Operating Radius	m	10.5	13.5
	Max. Operating Height	m	12	13.5
	Max. Operating Depth	m	-3	-3
	Max. Operating Radius (Grab Not Included)	t	4.6	3.4

Dimensions

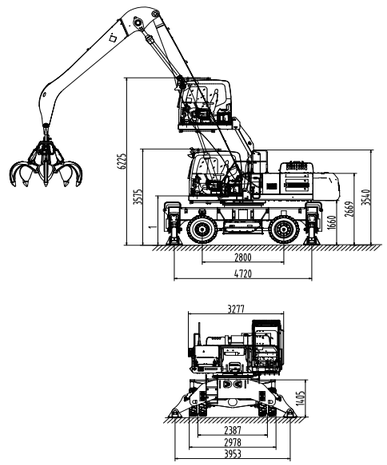

SMHW30 Lift capacities of material handler
(Boom 7.3m, Stick 5.1m, Unit:t)

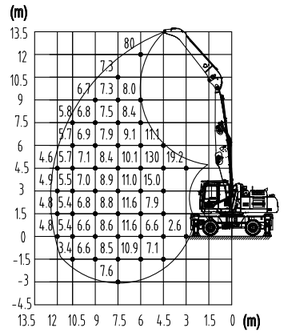

SMHW30 Lift capacities of material handler
(Boom 8.6m, Stick 5.6m, Unit:t)

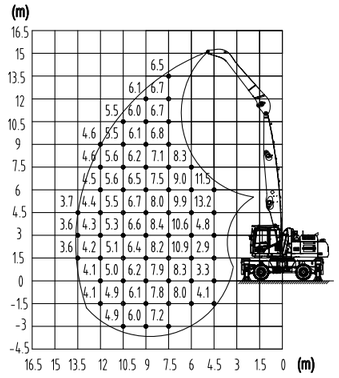

SMHW30G5

- Cummins engine, strong power
- Reinforced undercarriage, stable and safe
- Fits scrap, wood, recycling scenarios

Product Parameters

Technical Parameter

ITEM			UNIT	SMHW30G5
Power System	Engine	Model	-	CumminsB6.7
		Rated Power	kw/rpm	145/2000
		Torque	Nm/rpm	847/1500
		Emission	-	EU stage V
		Fuel Tank	L	465
Chassis System	Track Width		mm	2387
	Wheel Base		mm	2800
	Support Width(lengthways)		mm	4720
	Support Width(crosswise)		mm	3973
	Turning Radius		mm	8000
	Max. Gradeability		%	35
	Max. Travelling Speed		km/h	20
Hydraulic System	Type Of Control		-	Electronically Controlled Positive Flow System
	Main Pump	Rated Flow	L/min	2×260
	Max. System Pressure		MPa	32
	Hydraulic Oil Tank		L	230

Configuration Parameter

CONFIGURATION		UNIT	SMHW30G5	
Slewing Gear	Max. Rotating Speed	rpm	8	
Cabin	Cabin Lift Height	mm	2650	
Basic Parameters	Boom Configuration	m	12	14
		m	Boom 7.3	Boom 8
		m	Stick 5.1	Stick 6
	Max. Operating Radius	m	12	13.5
	Max. Operating Height	m	12	13.5
	Max. Operating Depth	m	-3	-3
	Max. Operating Radius Load (Grab Not Included)	t	4.5	3.2

Dimensions

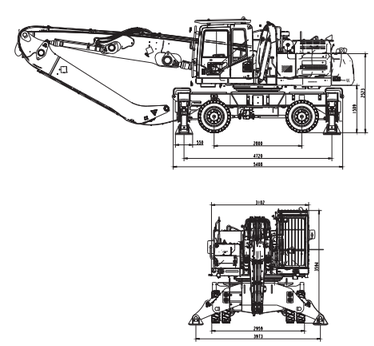

Scope Of Work

SMHW30G5 Lift capacities of material handler
(Boom7.3m, Stick5.1m, Unit:t)

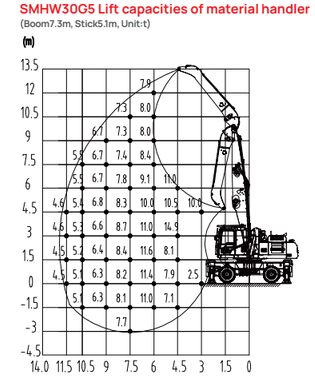

SMHW30G5 Lift capacities of material handler
(Boom 8m, Stick 6m, Unit:t)

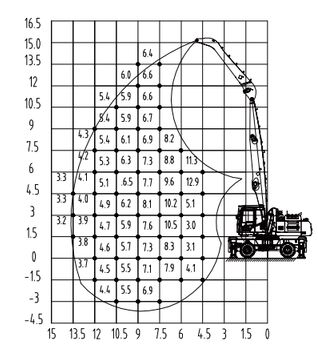

SMHC35

- Load-sensing system, 10% fuel savings
- Efficient engine-pump coordination
- Auto-idle & throttle control
- 300ms response, 200t/h throughput

Product Parameters

Technical Parameter

ITEM			UNIT	SMHC35
Power System	Engine	Model	-	Mitsubishi D06FRC
		Rated power	kW/rpm	147/2100
		Torque	Nm/rpm	750/1350
		Emission	-	com III
		Oil Tank Capacity	L	465
Traveling Gear	Track width		mm	2590
	Wheel Base		mm	3830
	Track Width		mm	600
	Max. Travelling Speed		km/h	5
Hydraulic System	Type Of Control		-	Electronically Controlled Positive Flow System
	Main Pump	Rated Flow	L/min	2×260

Configuration Parameter

CONFIGURATION		UNIT	SMHC35
Hydraulic System	Max. System Pressure	MPa	34.5
	Hydraulic Oil Tank	L	230
Slewing Gear	Max. Rotating Speed	rpm	8
Cabin	Cabin Lift Height	mm	2650
Basic Parameters	Boom Configuration	m	12
		m	Boom 6.8
		m	Stick 5.6
	Max. Operating Radius	m	10.5
	Max. Operating Height	m	10.5
	Max. Operating Depth	m	-6
	Max. Operating Radius (Grab Not Included)	t	3.4

Dimensions

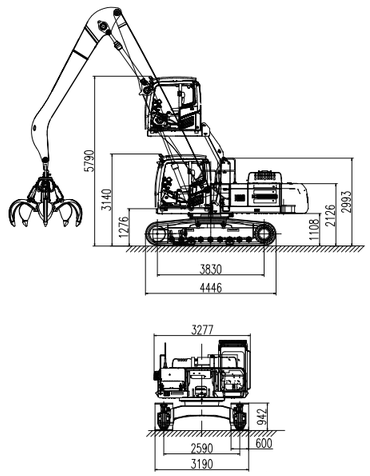

Scope Of Work

SMHC35 Lift capacities of material handler
(Boom 6.8m, Stick 5.6m, Unit:t)

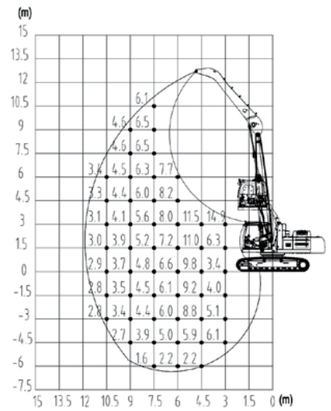

SMHW40

- 20% less fuel than 48t model
- Modular boom, longer fatigue life
- Auto-dust cooling with reversible fan
- Heated suspension seat, 50% less vibration

Product Parameters

Technical Parameter

ITEM			UNIT	SMHW40
Power System	Engine	Model	-	Deutz D09S3
		Rated Power	kw/rpm	175/2000
		Torque	Nm/rpm	1200/1100~1400
		Emission	-	Stage III
		Fuel Tank	L	600
Chassis System	Trackwidth		mm	2386
	Wheel Base		mm	3000
	Support Width(lengthways)		mm	5020
	Support Width(crosswise)		mm	4400
	Turning Radius		mm	8500
	Max.Gradeability		%	30
Hydraulic System	Type Of Control		-	Electronically Controlled Positive Flow System
	Main Pump	Model	-	kawasaki
		Rated Flow	L/min	2×288
	Max.System Pressure		MPa	32
	Hydraulic Oil Tank		L	320

Configuration Parameter

CONFIGURATION		UNIT	SMHW40	
Hydraulic System	Max. System Pressure	MPa	34.5	
Cabin	Cabin Lift Height	mm	2650	
Basic Parameters	Boom Configuration	m	17	15
		m	Boom 9.8	Boom 8.8
		m	Stick 7.5	Stick 6
	Max. Operating Radius	m	16.5	15
	Max. Operating Height	m	10.5	16.5
	Max. Operating Depth	m	-5	-4.5
	Max. Operating Radius Load (Grab Not Included)	t	3.9	5.1

Dimensions

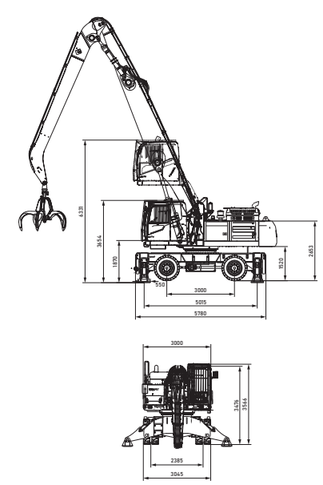

Scope Of Work

SMHW40R Lift capacities of material handler
(Boom 9.8m, Stick 7.5m, Unit:t)

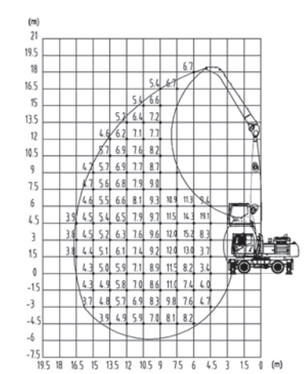

SMHW40G5

- 20% less fuel than 48t model
- Modular boom, longer fatigue life
- Auto-dust cooling with reversible fan
- Heated suspension seat, 50% less vibration

Product Parameters

Technical Parameter

ITEM			UNIT	SMHW40G5
Power System	Engine	Model		CumminsB6.7
		Rated power	kw/rpm	168/2000
		Torque	Nm/rpm	1044/1500
		Emission	min	EU stage V
		Fuel Tank	L	600
Chassis System	Trackwidth		mm	2386
	Wheel base		mm	3000
	Support width(lengthways)		mm	5020
	Support width(crosswise)		mm	4400
	Turning radius		mm	8500
	Max.Gradeability		%	30
	Max.Travelling Speed		km/h	20
Hydraulic System	Type Of Control		-	Electronically Controlled Positive Flow System
	Main Pump	Model	-	Kawasaki
		Rated Flow	L/min	2×288
	Main Valve		-	Kawasaki
	Reducer		-	Sany
	Boom Cylinder		-	Sany
	StickCylinder		-	Sany
	Max.System Pressure		MPa	32
	Hydraulic Oil Tank		L	320

Configuration Parameter

CONFIGURATION		UNIT	SMHW40G	
Hydraulic System	Slewing Bearing	-	Sany	
	Max.Rotating Speed	rpm	8	
Cabin	Cabin Lift Height	mm	2650	
Basic Parameters	Boom Configuration	m	17	15
		m	Boom 9.8	Boom 8
		m	Stick 7.5	Stick 6
	Max. Operating Radius	m	16.5	15
	Max. Operating Height	m	18	16.5
	Max. Operating Depth	m	-5	-4.5
	Max. Operating Radius load (Grab Not Included)	t	3.9	5.1

Dimensions

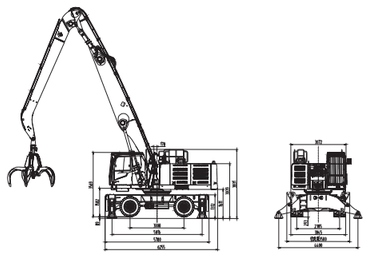

Scope Of Work

SMHW40G Lift capacities of material handler
(Boom 9.8m, Stick 7.5m, Unit:t)

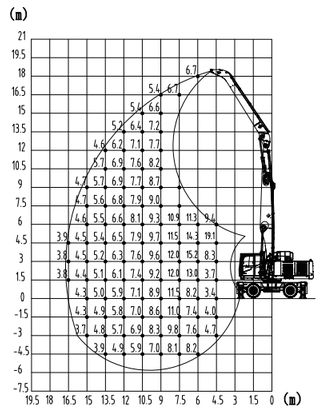

SMHW40E

- Energy recovery, 80% lower cost vs diesel
- 7–9h runtime with high-capacity battery
- Electric control + independent swing, +20% efficiency
- Compact wheeled chassis, strong climbing, agile movement

Product Parameters

Configuration Parameter

ITEM			UNIT	SMHW40E
Power System	Electric Motor	Model	-	Weiteli
		Rated Power	kW/rpm	160/2040，80/1900
		Battery Voltage	VDC	437
		Electronic Control	-	Weiteli
	Battery	Model	-	CATL
		Battery Charge Level	kWh	507
Chassis	Track Width		mm	2385
	Wheel Base		mm	3000
	Support Width (lengthways)		mm	5020
	Support Width (crosswise)		mm	4400
	Turning Radius		mm	8500
	Maximum Gradeability		%	30
	Max. Travelling Speed		km/h	20
Hydraulic System	Type Of Control		-	Electrically Controlled Positive Flow System
	Main Pump	Rated Flow	L/min	2×380
	Reducer	Model	-	Stub Tooth
	Maximum System Pressure		MPa	34
	Hydraulic Oil Tank		L	350

Configuration Parameter

CONFIGURATION		UNIT	SMHW40E		
Slewing Gear	Max. Rotating Speed	rpm	8		
Cabin	Cabin Lift Height	mm	2650		
Lubrication System	Mode	-	Automatic Lubrication		
Basic Parameters	Boom Configuration	m	17	15	14
		m	Boom 9.8	Boom 8.8	Boom 8.8
		m	Stick 7.5	Stick 6.6	Stick 5.6
	Max. Operating Radius (Excluding Spreader)	m	16.5	14.5	13.5
	Max. Operating Height (Excluding Spreader)	m	18	15	15
	Max. Operating Depth (Excluding Spreader)	m	-4.5	-4.5	-4.5
	Max. Operating Radius (Grab Not Included)	t	4	4.5	5

Dimensions

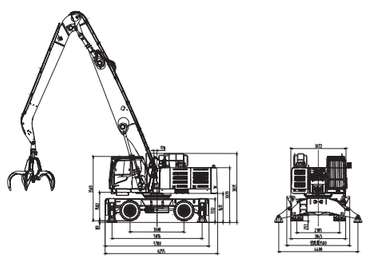

Scope Of Work

SMHW40-E Lift capacities of material handler
(Dynamic Ar 9.8m Bucket Rod 7.5m unit:t)

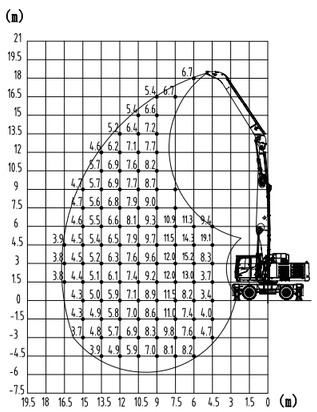

SMHW40-E Lift capacities of material handler
(Dynamic Ar 8.8m Bucket Rod 6.6m unit:t)

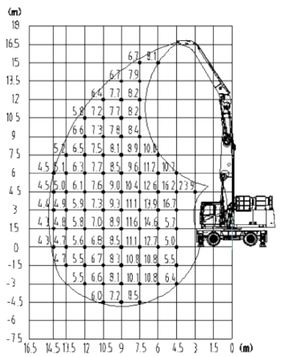

SMHC45V

- Load-sensing hydraulics, 10% fuel cut
- Optimized powertrain
- Auto-idle & throttle steps reduce loss
- 300ms response, 450t/h handling rate

Product Parameters

Configuration Parameter

ITEM			UNIT	SMHC45V
Power System	Engine	Model	-	Isuzu 6HK1
		Rated power	kW/rpm	212/2000
		Torque	Nm/rpm	1080/1500
		Emission	-	com III
		Oil Tank Capacity	L	600
Undercarriage	Track Gauge		mm	2590
	Wheelbase		mm	4140
	Track Width		cm	600
	Max. Travelling Speed		km/h	5
Hydraulic System	Type Of Control		-	Electronically Controlled Positive Flow System
	Main Pump	Rated Flow	L/min	2×320
	Maximum System pressure		MPa	32
	Hydraulic Oil Tank		L	310

Configuration Parameter

CONFIGURATION		UNIT	SMHC45V	
Slewing Gear	Max. Rotating Speed	rpm	8	
Cabin	Cabin Lift Height	mm	2650	
Basic Parameters	Boom Configuration	m	11	14
		m	Boom 7	Boom 8.6
		m	Stick 4.5	Stick 6
	Boom Mounted At The Pivot Point Of The Slewing Platform	-	Upper Pivot Point	Upper Pivot Point
	Max. Operating Radius	m	10.5	13.5
	Max. Operating Height	m	12	15
	Max. Operating Depth	m	-1.5	-3
	Max. Operating Radius (Grab Not Included)	t	5.9	4.1

Dimensions

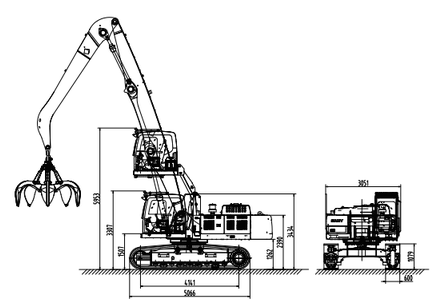

Scope Of Work

SMHC45V Lift capacities of material handler
(Boom 7m, Stick 4.5m, Unit:t)

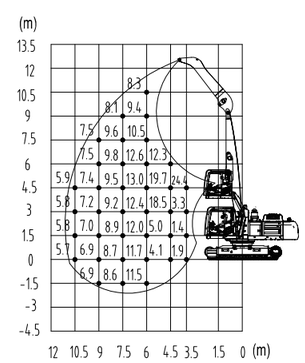

SMHC45V Lift capacities of material handler
(Boom 8.6m, Stick 6m, Unit:t)

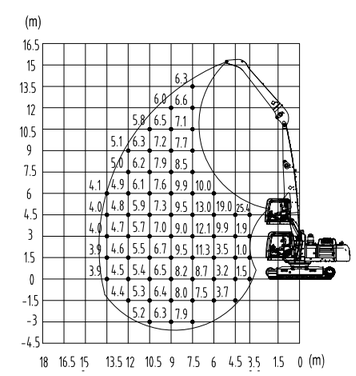

SMHW48V

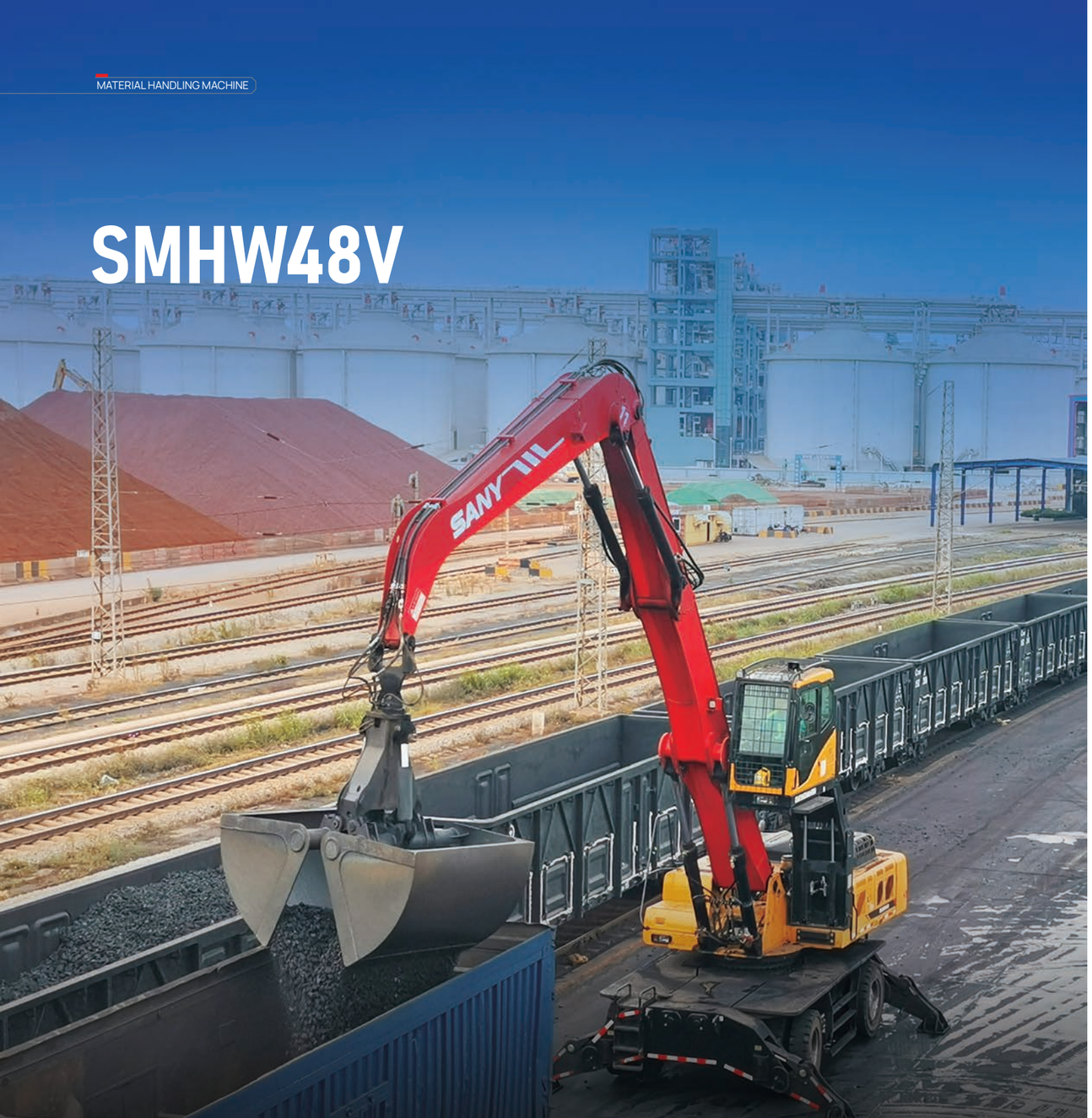

- 520t/h productivity
- 300ms actuation
- 20km/h wheeled chassis, fast relocation

Product Parameters

Technical Parameter

ITEM			UNIT	SMHW48V
Power System	Engine	Model	-	Isuzu 6HK1
		Rated power	kW/rpm	212/2000
		Torque	Nm/rpm	1080/1500
		Emission	-	com III
		Fuel Tank	L	600
Chassis	Track Width		mm	2746
	Wheel Base		mm	3200
	Support width (lengthways)		mm	5400
	Support width (crosswise)		mm	4800
	Turning Radius		mm	8800
	Max. Travelling Speed		km/h	20
Hydraulic System	Type Of Control		-	Electronically Controlled Positive Flow System
	Main Pump	Rated Flow	L/min	2×260

Configuration Parameter

CONFIGURATION		UNIT	SMHW48V	
Hydraulic System	Max. System Pressure	MPa	32	
	Hydraulic Oil Tank	L	310	
Slewing Gear	Max. Rotating Speed	rpm	8	
Cabin	Cabin Lift Height	mm	2650	
Basic Parameters	Boom Configuration	m	14	18
		m	Boom 8.6	Boom 10.5
		m	Stick 6	Stick 7.5
	Max. Operating Radius	m	13.5	16.5
	Max. Operating Height	m	15	16.5
	Max. Operating Depth	m	-4.5	-4.5
	Max. Operating Radius (Grab Not Included)	t	6.1	5.1

Dimensions

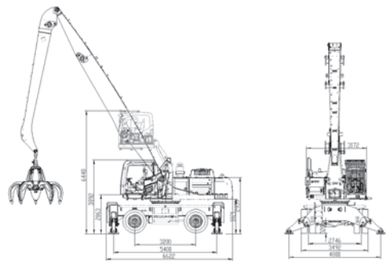

Scope Of Work

SMHW48V Lift capacities of material handler
(Boom 8.6m, Stick 6m, Unit:t)

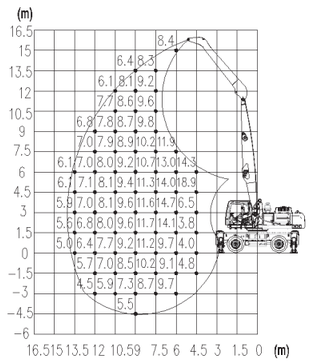

SMHW48V Lift capacities of material handler
(Boom 10.5m, Stick 7.5m, Unit:t)

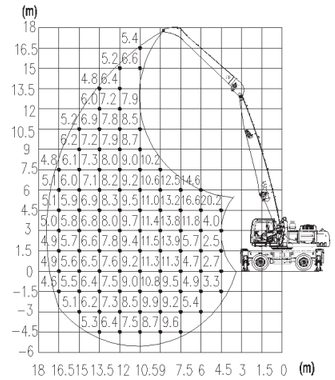

SMHW48G5

- For ports, timber, dismantling, recycling
- Heavy-duty design for high loads
- Energy-efficient, cost-effective
- Multiple compatible attachments

Product Parameters

Technical Parameter

ITEM			UNIT	SMHW48G5
Power System	Engine	Model	-	Cummins QSL9
		Rated Power	kw/rpm	252/1800
		Torque	Nm/rpm	1526/1400
		Emission	min	EU Stage V
		Fuel Tank	L	600
Chassis	Track Width		mm	2746
	Wheel Base		mm	3200
	Support Width (lengthways)		mm	5400
	Support Width (crosswise)		mm	4800
	Turning Radius		mm	8800
	Max. Travelling Speed		km/h	20
Hydraulic System	Type Of Control		-	Electronically Controlled Positive Flow System
	Main Pump	Rated Flow	L/min	2×320
	Max. System Pressure		MPa	32
	Hydraulic Oil Tank		L	340

Configuration Parameter

CONFIGURATION		UNIT	SMHW48G5	
Slewing Gear	Max. Rotating Speed	rpm	8	
Cabin	Cabin Lift Height	mm	2650	
Basic Parameters	Boom Configuration	m	18	20
		m	Boom 10.5	Boom 10.5
		m	Stick 7.5	Stick 9.5
	Max. Operating Radius	m	17.5	19.5
	Max. Operating Height	m	18	19.5
	Max. Operating Depth	m	-7	-9
	Max. Operating Radius Load (Grab Not Included)	t	4.3	3.5

Dimensions

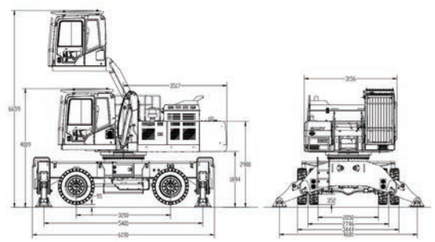

Scope Of Work

SMHW48G5 Lift capacities of material handler
(Boom10.5m, Stick 7.5m, Unit:t)

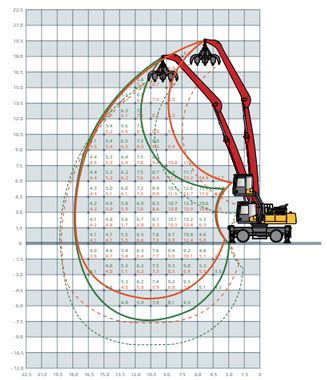

SMHW48G5 Lift capacities of material handler
(Boom10.5m, Stick 9.5m, Unit:t)

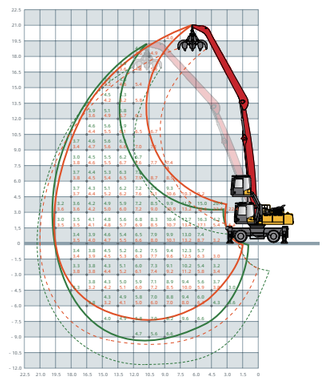

SMHW48-D

- Fuel-Saving Hydraulics: 20% lower consumption vs 48t models
- Modular Boom: 30%+ fatigue life extension
- Transport-Ready: 3m×3.5m regulation-compliant dimensions
- Self-Cleaning Radiator: Motor-driven reversible fan
- Enhanced Comfort: Heated air-ride seat + 50% less vibration

SANY

Product Parameters

Technical Parameter

ITEM			UNIT	SMHW48-D
Power System	Motor	Model	-	XEMC YE2-315L1-4
		Rated power	kw/rpm	160/1485
		Torque	Nm/rpm	1526/1400
		Voltage	AC	380V,50HZ
Chassis System	Trackwidth		mm	2746
	Wheel base		mm	3200
	Support width(lengthways)		mm	5400
	Support width(crosswise)		mm	4680
	Turning radius		mm	8800
	Max.Gradeability		%	35
	Max.Travelling Speed		km/h	5
Hydraulic System	Type Of Control		-	Electronically Controlled Positive Flow System
	Main Pump	Model	-	Kawasaki
		Rated Flow	L/min	2×320
	Main Valve		-	Kawasaki
	Reducer		-	Sany
	Boom Cylinder		-	Sany
	StickCylinder		-	Sany
	Max.System Pressure		MPa	32
	Hydraulic Oil Tank		L	380

Configuration Parameter

CONFIGURATION		UNIT	SMHW48-D	
Slewing Gear	Slewing Bearing	-	SANY	
	Max. Rotating Speed	rpm	8	
Cabin	Cabin Lift Height	mm	2650	
Basic Parameters	Boom Configuration	m	18	20
		m	Boom 10.5	Boom 10.5
		m	Stick 7.5	Stick 9.5
	Max. Operating Radius	m	16.5	16.5
	Max. Operating Height	m	19.5	19.5
	Max. Operating Depth	m	5	-9
	Max. Operating Radius (Grab Not Included)	t	4.3	3.5

Dimensions

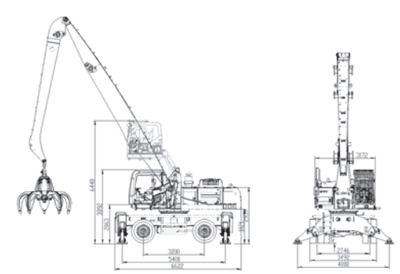

Scope Of Work

SMHW48-D Lift capacities of material handler
(Boom 10.5m, Stick 7.5m, Unit:t)

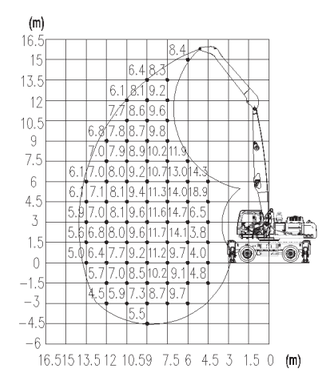

SMHW48-D Lift capacities of material handler
(Boom 10.5m, Stick 9.5m, Unit:t)

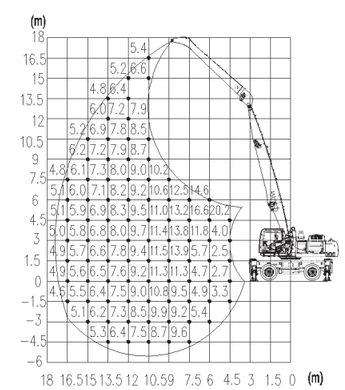

SMHC50V-D

- Electric drive cuts costs by 65%
- 300ms fast response
- Crawler chassis for tough terrain

Product Parameters

Technical Parameter

ITEM			UNIT	SMHC50V-D
Power System	E-Motor	Model	-	XEMC YE2-315L1-4
		Rated Capacity	kW/rpm	160/1485
		Input Voltage	V/Hz	380/50
		Type Of Start	-	Soft Start
Traveling Gear	Working Gauge		mm	2590
	Wheel Base		mm	4140
	Track Width		mm	600
	Max. Travelling Speed		km/h	5
Hydraulic System	Type Of Control		-	Electronically Controlled Positive Flow System
	Main Pump	Rated Flow	L/min	2×297
	Max. System pressure		MPa	32
	Hydraulic Oil Tank		L	310

Configuration Parameter

CONFIGURATION		UNIT	SMHC50V-D	
Slewing Gear	Max. Rotating Speed	rpm	8	
Cabin	Cabin Lift Height	mm	2650	
Basic Parameters	Boom Configuration	m	11	14
		m	Boom 7	Boom 8.6
		m	Stick 4.5	Stick 6
	Max. Operating Radius	m	10.5	13.5
	Max. Operating Height	m	10.5	13.5
	Max. Operating Depth	m	-1.5	-3
	Max. Operating Radius (Grab Not Included)	t	5.9	4.1

Dimensions

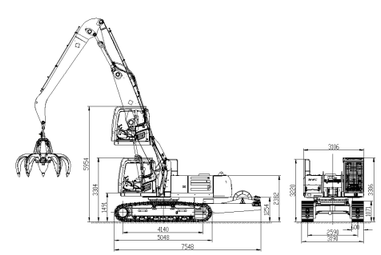

Scope Of Work

SMHC50V-D Lift capacities of material handler
(Boom 7m, Stick 4.5m, Unit:t)

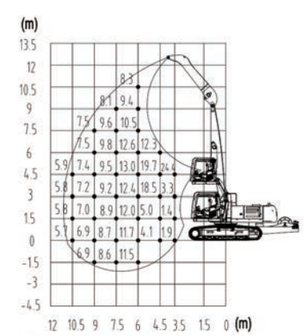

SMHC50V-D Lift capacities of material handler
(Boom 8.6m, Stick 6m, Unit:t)

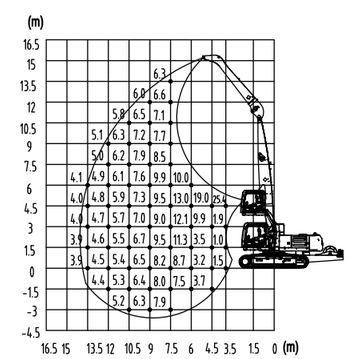

SMHC70

- 6.5t grab, 24s cycle, 2× 16t crane output
- Lightweight, rail-free setup
- Telescopic crawlers, ground-friendly mobility
- Dual power, 65%+ cost saving

Product Parameters

Technical Parameter

ITEM			UNIT	SMHC70
Power System	Engine	Model	-	Deutz D09S3T9
		Rated Power	kw/rpm	260/2000
		Torque	Nm/rpm	1530/1200-1400
		Emission	-	EU Stage III
		Oil Tank Capacity	L	600
	E-Motor	Model	-	XEMC YE3-355M-4
		Rated Capacity	kW/rpm	250/1485
		Input Voltage	V/Hz	380/ 50
		Type Of Start	-	Soft Start
Hydraulic System	Type Of Control		-	Electronically Controlled Positive Flow System
	Main Pump	Rated Flow	L/min	While Using Engine: 2×400 While Using E-Motor: 2×416
	Max. System Pressure		MPa	34.3
	Hydraulic Oil Tank		L	500

Configuration Parameter

CONFIGURATION		UNIT	SMHC70		
Traveling Gear	Working Gauge	mm	4000		
	Wheel Base	mm	4690		
	Track Width	mm	762		
	Max. Travelling Speed	km/h	3		
	Max. Rotating Speed	rpm	8		
Cabin	Cabin Lift Height	mm	2650		
Basic Parameters	Boom Configuration	m	18	20	22
		m	Boom 10.5	Boom 12.5	Boom 12.5
		m	Stick 7.5	Stick 7.5	Stick 10
	Max. Operating Radius	m	18	19.5	21
	Max. Operating Height	m	16.5	18	19.5
	Max. Operating Depth	m	-6	-6	-9
	Max. Operating Radius (Grab Not Included)	t	7.4	6.6	5.8

Dimensions

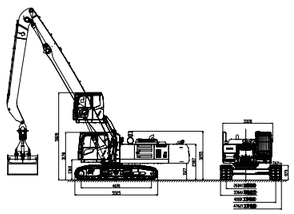

Scope Of Work

SMHC70 Lift capacities of material handler (Boom 10.5m, Stick 7.5m, Unit:t)

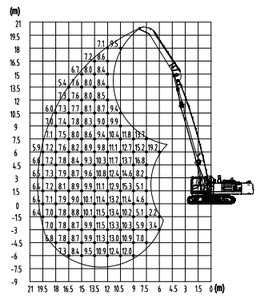

SMHC70 Lift capacities of material handler (Boom 12.5m, Stick 7.5m, Unit:t)

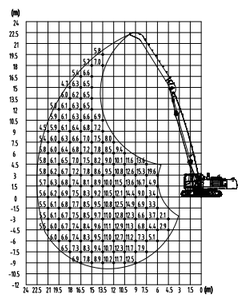

SMHC70 Lift capacities of material handler (Boom 12.5m, Stick 10m, Unit:t)

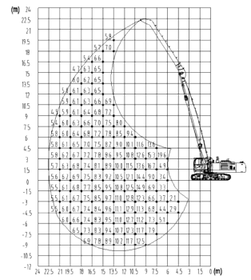

SMHW80

- 9t grab, 30s cycle, 800t/h output
- 13m depth, 23m height, 24m radius
- Energy recovery, 20% savings
- Agile wheeled chassis

SANY

Product Parameters

Technical Parameter

ITEM			UNIT	SMHW80
Power System	Engine	Model	-	Deutz D09S3T9
		Rated power	kw/rpm	260/2000
		Torque	Nm/rpm	1530/1200-1400
		Emission	-	EU Stage III
		Oil Tank Capacity	L	600
	E-Motor	Model	-	-
		Rated Capacity	kW/rpm	-
		Input Voltage	V,Hz	-
		Type Of Start	-	-
Chassis System	Track Width		mm	3120
	Wheel Base		mm	3600
	Support Width(lengthways)		mm	6300
	Support Width(crosswise)		mm	5600
	Turning Radius		mm	9800
	Max. Gradeability		%	20
	Max. Travelling Speed		km/h	10
Hydraulic System	Type Of Control		-	Electronically Controlled Positive Flow System
	Main Pump	Rated Flow	L/min	2×400
	Max. System Pressure		MPa	34
	Hydraulic Oil Tank		L	500

Configuration Parameter

CONFIGURATION		UNIT	SMHW80		
Slewing Gear	Max. Rotating Speed	rpm	8		
Cabin	Cabin Lift Height	mm	2650		
Basic Parameters	Boom Configuration	m	18	22	24
		m	Boom 10.5	Boom 12.5	Boom 13
		m	Stick 7.5	Stick 10	Stick 11
	Max. Operating Radius	m	18	22	24
	Max. Operating Height	m	18	21	23
	Max. Operating Depth	m	-4.5	-7.5	-9
	Max. Operating Radius (Grab Not Included)	t	10.5	8.1	6.4

Dimensions

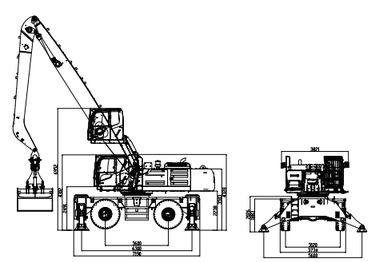

Scope Of Work

SMHW80 Lift capacities of material handler
(Boom10.5m, Stick7.5m, Unit:t)

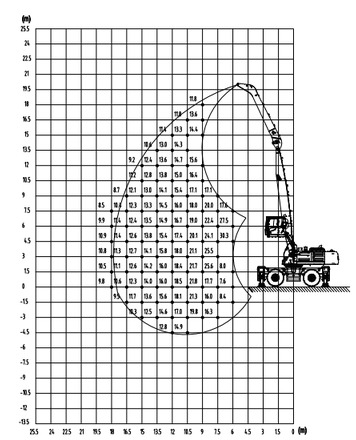

SMHW80 Lift capacities of material handler
(Boom 13m, Stick 11m, Unit:t)

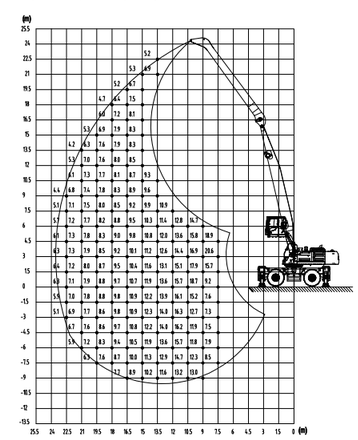

SMHC100

- 9t grab, 30s cycle, 800t/h
- Energy-saving with regen & simulation
- 13m depth, 23m height, 24m reach
- Gantry chassis for rail yards

SANY

Product Parameters

Technical Parameter

ITEM			UNIT	SMHC100
Power System	Engine	Model	-	Deutz D09S3T9
		Rated Power	kw/rpm	260/2000
		Torque	Nm/rpm	1530/1200-1400
		Emission	-	EU Stage III
		Oil Tank Capacity	L	600
	E-Motor	Model	-	-
		Rated Capacity	kW/rpm	-
		Input Voltage	V/Hz	-
		Type Of Start	-	-
Hydraulic System	Type Of Control		-	Electronically Controlled Positive Flow System
	Main Pump	Rated Flow	L/min	2×400
	Max. System Pressure		MPa	34
	Hydraulic Oil Tank		L	500

Configuration Parameter

CONFIGURATION		UNIT	SMHC100		
Traveling Gear	Working Gauge	mm	6000		
	Wheel Base	mm	7420		
	Track Width	mm	950		
	Max.Travelling Speed	km/h	3		
Slewing Gear	Max. Rotating Speed	rpm	8		
Cabin	Cabin Lift Height	mm	3200		
Basic Parameters	Boom Configuration	m	18	18	22
		m	Boom 10.5	Boom 12.5	Boom 14.5
		m	Stick 7.5	Stick 10	Stick 11
	Max. Operating Radius	m	18	22	24
	Max. Operating Height	m	24	27	29
	Max. Operating Depth	m	0	-3	-5
	Max. Operating Radius (Grab Not Included)	t	9.0	7.5	5.0

Dimensions

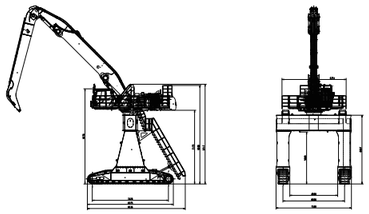

Scope Of Work

SMHC100 Lift capacities of material handler
(Boom10.5m, Stick7.5m, Unit:t)

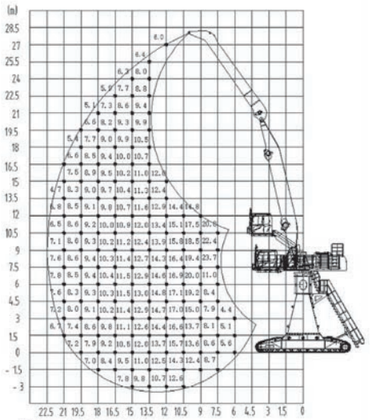

SMHC160

- 13t grab, 30s cycle, 800t/h
- Energy recovery, 20% savings, 60–80L/h
- 24m radius with K22/K26 boom
- Gantry crawler chassis, 40% gradient

Product Parameters

Configuration Parameter

ITEM			UNIT	SMHC160
Power System	Engine	Model	-	Deutz D09S3T9A*2
		Rated power	kw/rpm	2*235/2000
		Torque	Nm/rpm	2*1450/1200~1400
		Emission	-	Stage III /CN-4
		Oil Tank Capacity	L	2200
Chassis	Track Width		mm	6000
	Wheel Base		mm	7420
	Support Width (lengthways)		mm	8375
	Support Width (crosswise)		mm	7340
	Turning Radius		mm	/
	Max. Travelling Speed		km/h	3
Hydraulic System	Type Of Control		-	Fully Electronically Controlled Positive Flow System
	Main Pump	Rated Flow	L/min	1450
	Maximum System Pressure		MPa	35
	Hydraulic Oil Tank		L	1100

Configuration Parameter

CONFIGURATION		UNIT	SMHC160	
Slewing Gear	Max. Rotating Speed	rpm	5	
Cabin	Cabin Lift Height	m	Fixed Height increase2.3	
Basic Parameters	Boom Configuration	m	22	26
		m	Boom 12	Boom 14.5
		m	Stick 10	Stick 12
	Max. Operating Radius (Excluding Spreader)	m	20	24
	Max. Operating Height (Excluding Spreader)	m	26	30
	Max. Operating Depth (Excluding Spreader)	m	-3	-7
	Max. Operating Radius (Grab Not Included)	t	21	13

Dimensions

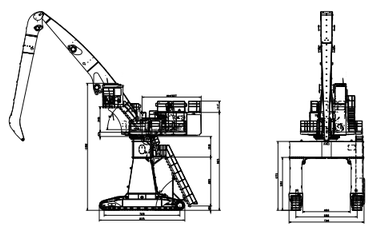

Scope Of Work

SMHC160 Lift capacities of material handler
(Boom12m, Stick10m, Unit:t)

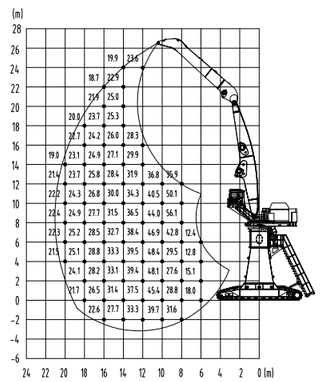

SMHC160 Lift capacities of material handler
(Boom 14.5m, Stick12m, Unit:t)

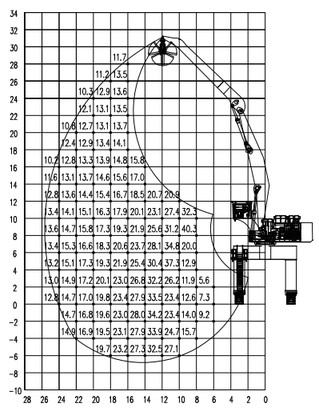

SMHR200

Efficiency:

- Load capacity can be more than 11.3 tons when 32.5m in horizon, 45 seconds when turn 90 degrees to operate in one working cycle, the average efficiency can reach 700 tons per hour.

Energy saving:

- Energy recovery system, saving energy efficiency 15% ,electrical control positive flow system, energy consumption reduce 5% ,comprehensive operation consumption about 60~80 Litre per hour.

Reliable:

- Suit for -45°C~+45 °C working condition,dynamic anti-tipping over protection and bracket protection against falling and loosening,automatic circular fire extinguishing system in engine room.

Product Parameters

Configuration Parameter

ITEM			UNIT	SMHR200
Power System	Engine	Model	-	Deutz D13S3T9*2
		Rated power	kw/rpm	2*353/2000
		Torque	Nm/rpm	2*2350/1100~1500
		Emission	min	COM III/CN IV
		Fuel Tank	L	4000
	E-Moto	Model	-	XDYSP-4001-4 B35
		Rated Capacity	kW/rpm	2*355/1486
		Input voltage	V/Hz	380/25~75
		Type Of Start	-	transducer control
Hydraulic System	Type Of Control		-	Electronically Controlled Positive Flow System
	Main Pump	Model	-	Engine connection pump:kawasaki E-motor connection pump:kawasaki
		Rated Flow	L/min	1920
	Main Valve		-	Rexroth
	Reducer		-	Bonfiglioli
	Boom Cylinder		-	Sany
	StickCylinder		-	Sany
	Max.System Pressure		MPa	34.3
	Hydraulic Oil Tank		L	1500

Configuration Parameter

CONFIGURATION		UNIT	SMHR200	
Traveling Gear	Working Gauge	mm	10500	
	Wheel Base	mm	10500	
	Max.Travelling Speed	km/h	2	
	Slewing Bearing	-	Sany	
Slewing Gear	Max.Rotating Speed	rpm	5	
Cabin	Cabin Lift Height	mm	2300	
Basic Parameters	Boom Configuration	m	31	35
		m	Boom 16	Boom 19.5
		m	Stick 15	Stick 16
	Max. Operating Radius	m	30	32.5
	Max. Operating Height	m	32.5	36
	Max. Operating Depth	m	-10	-12
	Max. Operating Radius (Grab Not Included)	t	9.2	11.3

Dimensions

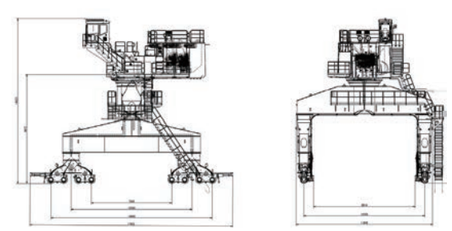

Scope Of Work

SMHR200 Lift capacities of material handler
(Boom19.5m, Stick16m, Unit:t)

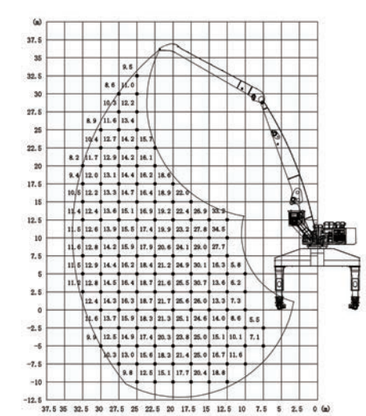

Introduction to the New Generation Material Handler Cab

Aesthetics and Comfort

Orange-peel Grab

- Rocker switches have been replaced with push-button switches.
- One-touch start, cup holder, and emergency stop integrated into right armrest console.

Comfort Enhancements

- Standard electro-controlled air suspension heated seat
- Standard right-side roll-up curtain and front sunshade.

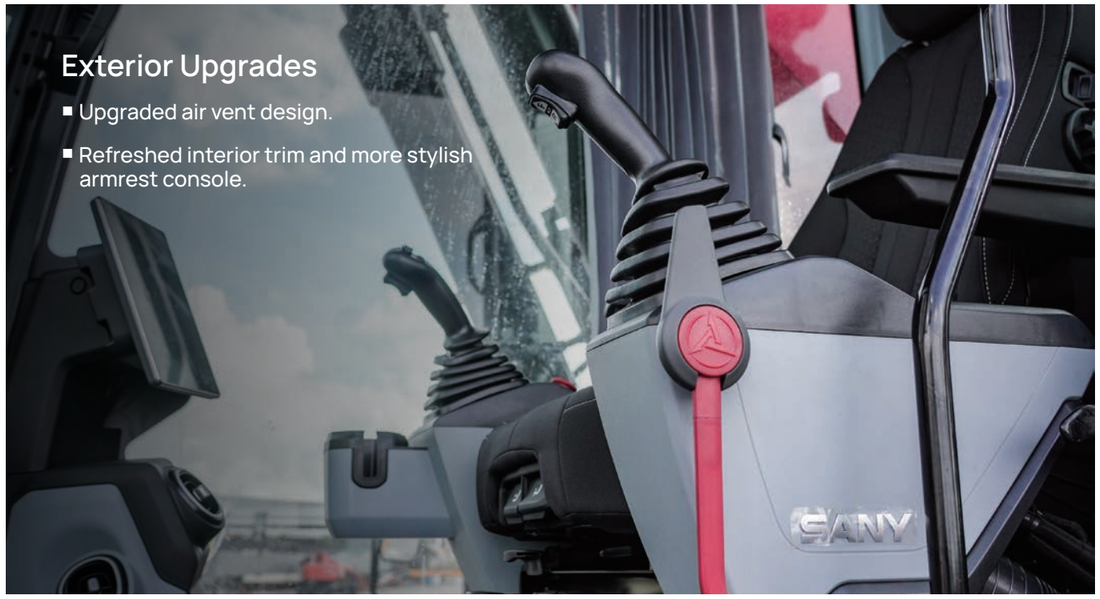

Exterior Upgrades

- Upgraded air vent design.
- Refreshed interior trim and more stylish armrest console.

Control System Updates

- Independent 10-inch touchscreen display
- Integrated controls for Bluetooth phone, music, radio, and AC
- Configurable camera display interface with four viewing modes
- Independent power supply for cab and upper platform with self-diagnosis
- Integrated controller for ignition switch and throttle knob
- EVI System

Overall Exterior Design

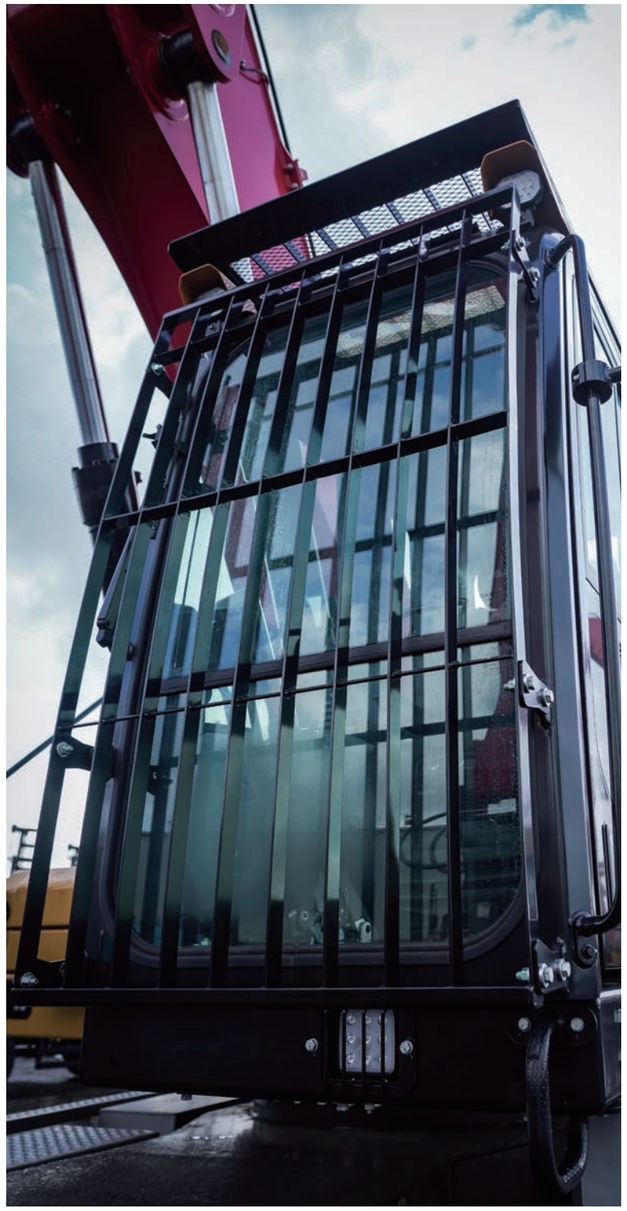

SANY

Attachments

Orange-peel Grab

Technical Parameter		
Capacity(m³)	0.8m³	1m³
Self-weight(kg)	1902	1952
Self weight without rotator(kg)	1675	1725
Width when expanded(mm)	2550	2933
Width when closed(mm)	1625	1822
Height with rotator(kg)	3093	3286
Height without rotator(kg)	2829	3022
Working pressure(Mpa)	30	30

Timber Grab

Technical Parameter	
Looping area(m²)	Parameter
Self weight with rotator(kg)	2211
Looping area when expanded(mm)	3251
Looping area when closed(mm)	1638
Height/length(mm)	4028/810
Working pressure(Mpa)	28

Clamshell Grab

Technical Parameter					
Capacity(m³)	2.0m³	2.5m³	3.5m³	4.0m³	5.0m³
Self-weight(kg)	2216	2404	2566	2752	2924
Self weight without rotator(kg)	1888	2090	2243	2318	2795
Length(mm)	1500	1602	1804	2000	2000
Width expanded(mm)	2470	2865	3112	2918	3228
Width closed(mm)	2218	2298	2668	2696	2595
Height with rotator(kg)	3270	3468	3597	3652	3629
Height without rotator(kg)	3006	3204	3333	3234	3458
Working pressure(Mpa)	30	30	30	30	30

Steel Tube Grab

Technical Parameter	
Item	Parameter
Rated load(t)	8
Max. Rotate speed(r/min)	10
Rated working pressure(MPa)	25
Stretch Itinerary(mm)	single side 1420
Lateral distance(mm)	left 360/right 360
Steel tube length(m)	6-8.5
Spreader self weight(t)	2.5

Pulp Grab

Technical Parameter	
Item	Parameter
Rated load(t)	6
Max. Rotate speed(r/min)	10
Movable hook open/close time(s)	<1
Rated working pressure(mpa)	25
Spreader length(mm)	2600
Spreader width(mm)	1300
Spreader height(mm)	2150
Hook distance range(mm)	840 -2000
Spreader self weight(t)	1.5

Generator System

Technical Parameter			
Item	WM5-110L	WM5-130L	WM5-160L
Rate of power kW	25		
Electromagnet			
Item	ZKZL-19E-D		
Shape(mm)	520×350×750 (dimension)		
Output rate of work(kW)	25		
Input voltage(V)	AC380		
Output voltage(V)	DC220		
Protection level	IP45 (suitable for outdoor use)		
Magnetization & demagnetization time	≤3s		
Control cabinet			
Item	WM5-110L	WM5-130L	WM5-160L
Rated voltage(DC)	220V	220V	220V
Input rate of power(kW)	8.14	13.4	17.8
Diameter(m)	1.1	1.3	1.6
Self weight(kg)	around 1310	around 2100	around 3050
Cold current(a)	37	60.9	81
Protection level	IP67	IP67	IP67
Insulation level	H level	H level	H level
Cast iron mold(kg)	800	1100	2300
Cutting bits (kg)	800	1100	2300
No.1 Steel scalp(kg)	400	600	1100
No.2 Steel scrap(kg)	100	200	400
Type of connection	chain	chain	chain
Electromagnet outlet	YC2×10	YC2×16	YC2×16

Magnetic plate

SANY

Construction Cases

45T

35T

40T

45T

50T

70T

SANY

Construction Cases (Inland Port)


160T


80T


70T

Construction Cases (Rail Yard)


70T


40T


45T


70T

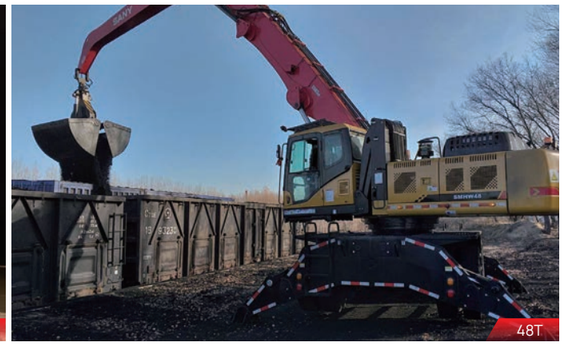
48T

Construction Cases (Cargo)

36T

48T


200T

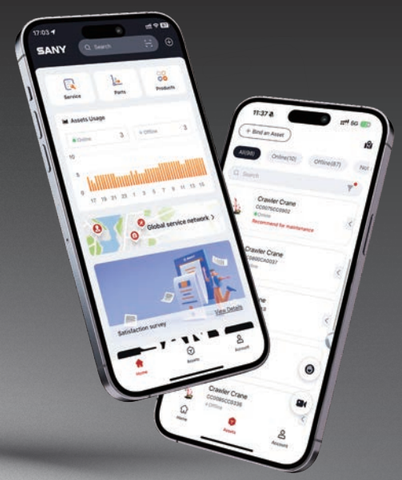

SANY Industrial Park, Zhuhai, Guangdong, China
Service: +86-4008-87-8318 https://www.sanyglobal.com

Considering the continuous progress and update of SANY Marine technology,
the technical parameters and configuration of products are modified and adjusted at any time, so this brochure is for reference only.
The appearance, configuration and technical parameters of the specific model are subject to the actual model sold.

Contact SANY Group Follow SANY Group

SANY MARINE